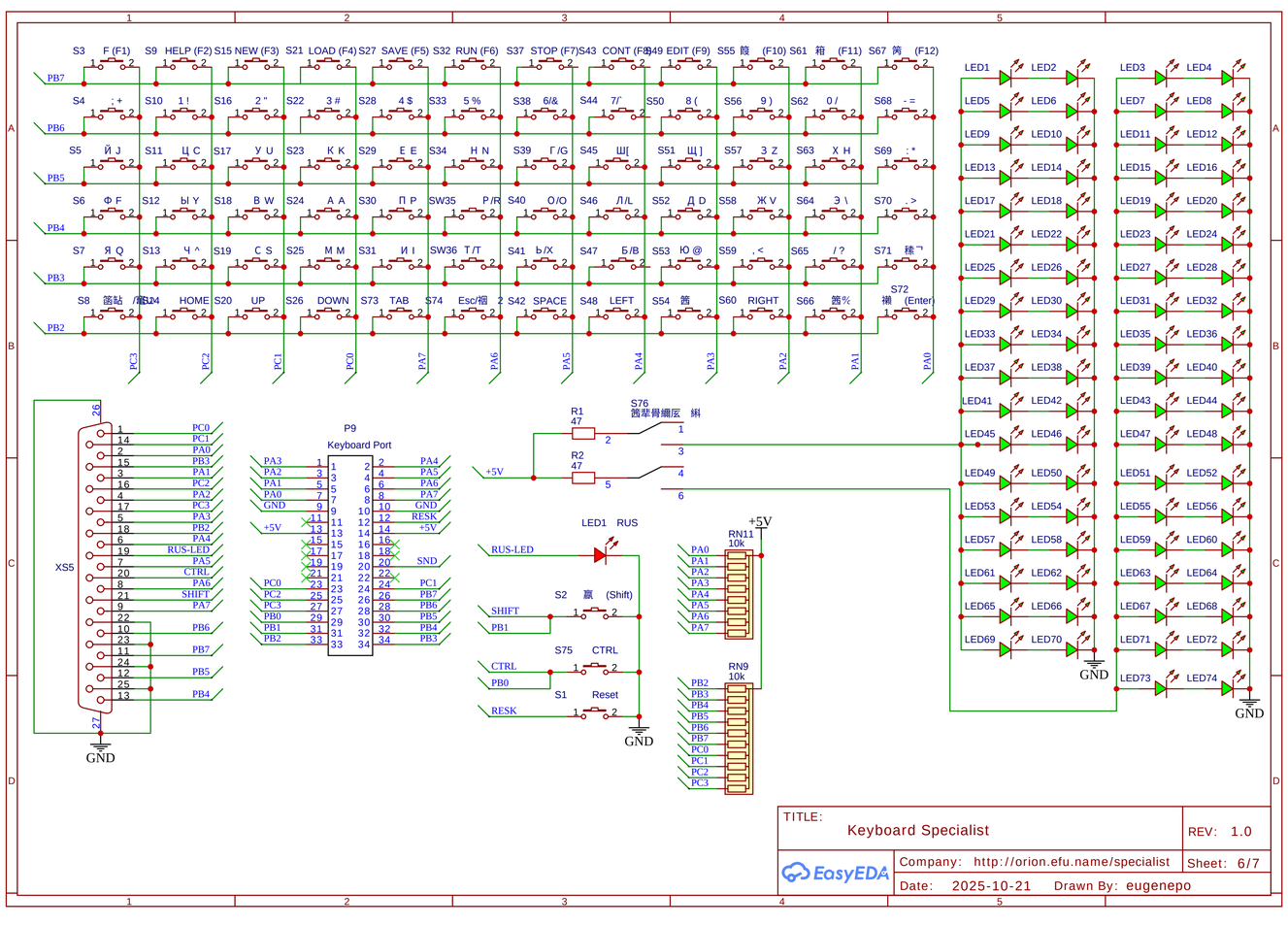

TITLE: Keyboard Specialist		REV: 1.0
EasyEDA	Company: http://orion.efu.name/specialist	Sheet: 6/7
	Date: 2025-10-21 Drawn By: eugenepo	

TAPEOUT